DCS1800-1P-070310:Layout 1 7/3/10 12:30 PM Page 1

GENERAL®

DCS1800ART

USER'S MANUAL

ARTICULATING BORESCOPE PROBE

Content

1) Product Features ---------- 4
2) Getting Started ---------- 5
3) Manipulate ---------- 6
4) Specification ---------- 11
5) Trouble Shooting ---------- 12
6) Insert Tube Maintenance ---------- 12
7) Camera and Lens cleaning ---------- 12

1) Product Features

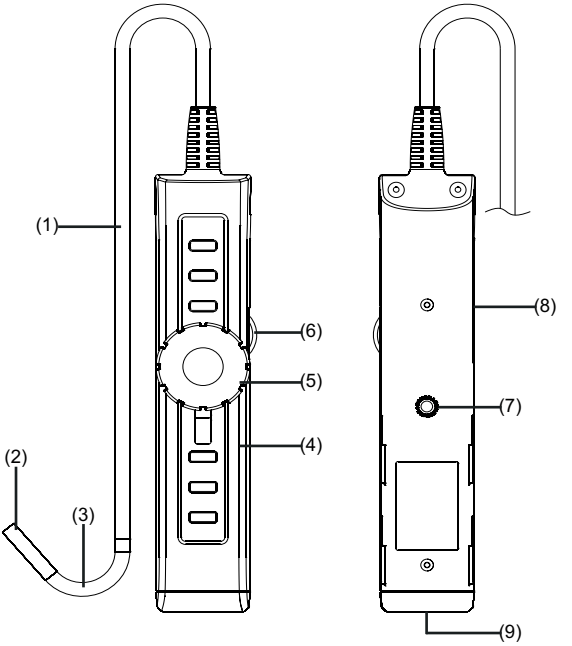

(1) Insert Tube

(2) Camera Lens

(3) Bending Neck

(4) Console

(5) Control Wheel

(6) On/Off Switch & Light Adjustment

(7) Channel Switch

(8) Power Indicator

(9) USB Port

2) Getting Started

Step 1 To activate the insertion tube controller, turn the LED adjustment dial colockwise until yo hear a "click" followed by illumination of the adjacent green light.

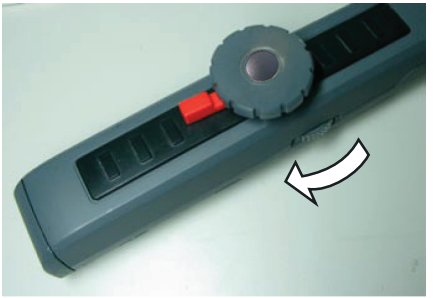

Step 2 Press and hold down the ⏻ button on the console for 3seconds until the image is displayed on the monitor.

Step 3 Aim the camera lens at the selected object. Press 📷 to capture a .JPG image, or 🎥 to begin recording a .ASF video.

3) Manipulate

Moving View

Want to bend the tip right side, just rotate the control wheel clock wise. Want to bend to the left side, just rotate the wheel counter clock wise.

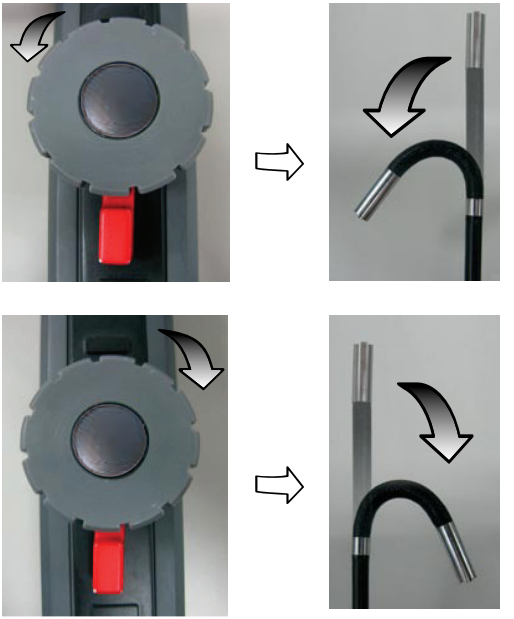

Lock

Twist the knob clockwise to lock bending neck in place. When you want to fix the bending neck angle, just twist the lock shaft clock wise to the lock position.

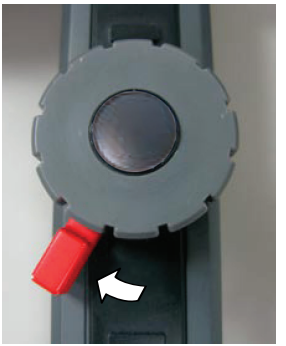

Light Adjustment

Twisting light adjusting wheel to adjust the brightness of the light source.

When want to turn off this articulation handle, just twist this wheel up and until you hear a 'click' sound.

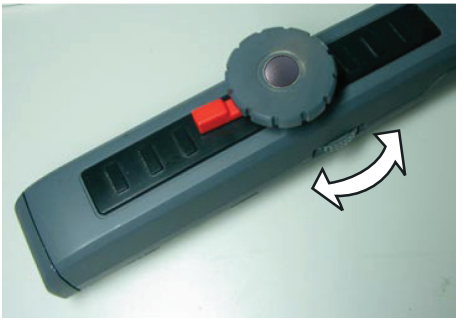

Channel Adjusting

This articulation handle must use the same channel as the console during wireless transmission. Adjust the channel by using a small slotted screw driver following the direction of the arrow sign as shown below.

Users may refer to the following table to choose a suitable channel.

Channel	Arrow Indication	Frequency
1	9,1	2414MHz
2	A,2	2432MHz
3	C,4	2450MHz
4	8,0	2468MHz

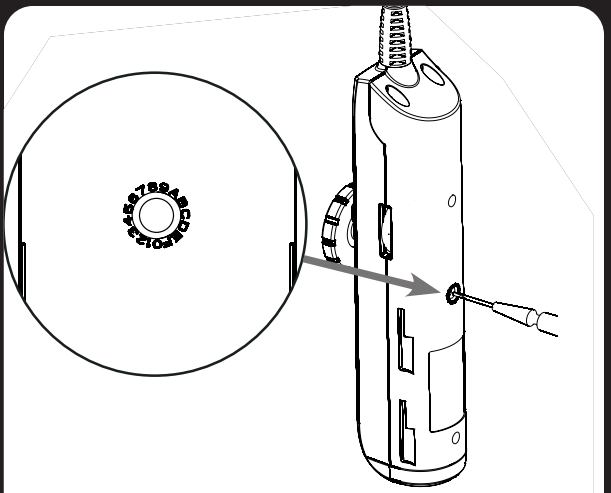

Re-charging the battery

Insert the handle into the rear slot of the M2 console to re-charge both simultaneously. Connect the handle controller to a PC or Laptop using a standard Mini USB cable for re-charge.

Caution

1. Turn off the console and handle during re-charging.
2. Ensure the power of PC/Laptop is turned on during re-charging by USB cable.
3. Ignore the “found new hard drive” message during re-charging by USB cable.

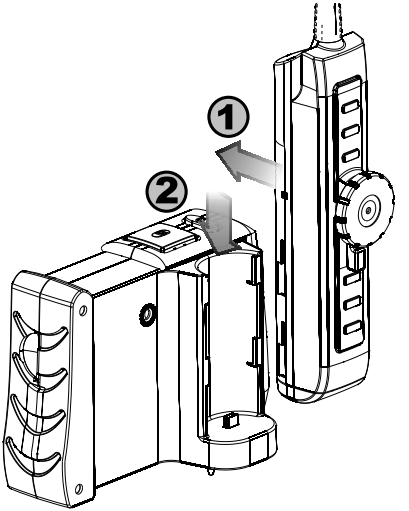

We can follow the indicator light signal to understand the status of the handle battery.

Light	indication	Status description
Green	In use	Working under full battery
Dark Red	low battery	Please recharge the battery when the dark red light appears during usage.
Orange	Charging while in use	Charging while in use
Red	Charging while power off	Charging while power off
None	Full battery(During power-off)	The light dims when the battery is fully charged.

4) Specification

Camera system & Insert tube	
Insert tubes diameter	6.0mm
Rescolution	325(H)*250(V)
Housing	stainless Steel
Light Source	White LED
Length	1M (Option: 2M, 3M)
Field of View	Horizontal field angle 46 º
	Vertical field angle 34º
	Diagonal field angle 56º
Depth of Field (DOF)	1cm~6cm
Working Temperature	32° to 131°F (0º to 55ºC)
Articulation Angle	2 Way
Articulation Radius	1.89+/- .04" (48 +/-1mm)
Handle	
Dimensions	5.5x1.4x1.3" (139x35x32mm)
Weight	7.8 oz. (.220kg)
Wireless Trans-ceiver Frequency	2.4GHz 4channels (2414MHz 2432 MHz 2450MHz 2468MHz)
Battery	Rechargeable Li-Poly-mer battery 3.7V
rightness Control	Variable

5) Trouble Shooting

1.Unable to turn on the console

Users will not be able to turn on the console when the battery is very low or empty. Please re-charge before use.

2.Can turn on the unit but the image does not appear on the monitor

Please check the insertion tube connector or simply re-connect the insertion tube to correct the problem.

3.Unable to capture photos/videos

Please check the status of the SD card. Users will not be able to capture photos or video if the SD card is not installed properly or if it is full, write protected or damaged.

6) Insert Tube Maintenance

•To avoid danger, please do not put the insert tube into any flammable liquid or gas.

•The insert tube contains a series of small wires that control the optics and electronics of the camera tip. To ensure long-term reliability, do not bend the insert tube more than 180 degrees, and always bend the insert tube in as large an arc as possible during usage and storage.

7) Camera and Lens cleaning

•User may clean the camera lens with a cotton swab and small amount of cleaning naphtha.

•The articulation handle is designed for industrial use only. Do not use the system for human or any other biological inspection.

•Do not insert the insert tube into any flammable gas or liquid (such as a fuel tank) to avoid dangers.

•Do not use the articulation handle in a fuel tank or other dangerous environments such as a gasoline or alcohol storage tank.

•Do not use any corrosive liquid for cleaning, such as alcohol.

•Do not try to disassemble the product. This presents a shock hazard and could damage the unit.

•Do not bend the insert tube over 180 degrees during usage or storage.

•Please use only recommended components or accessories. Unapproved accessories and components may cause damage.

•Please do not use the articulation handle in a medical facility or on an airplane, as the wireless signal may interfere with other critical equipment nearby.

•Avoid direct exposure to sunlight for long periods of time.

Notes

Notes

GENERAL®

Specialty Tools & Instruments

GENERAL TOOLS & INSTRUMENTS
80 White Street New York, NY 10013-3567
PHONE (212) 431-6100 • FAX (212) 431-6499
TOLL FREE (800) 697-8665
e-mail: sales@generaltools.com
www.generaltools.com

DCS1800 User's Manual

Specifications subject to change without notice.

©2010 GENERAL TOOLS & INSTRUMENTS
NOTICE - WE ARE NOT RESPONSIBLE FOR TYPOGRAPHICAL ERRORS.

MAN#DCS1800 7/10